REVISION RECORD			
LTR	ECO NO.	APPROVED:	DATE:

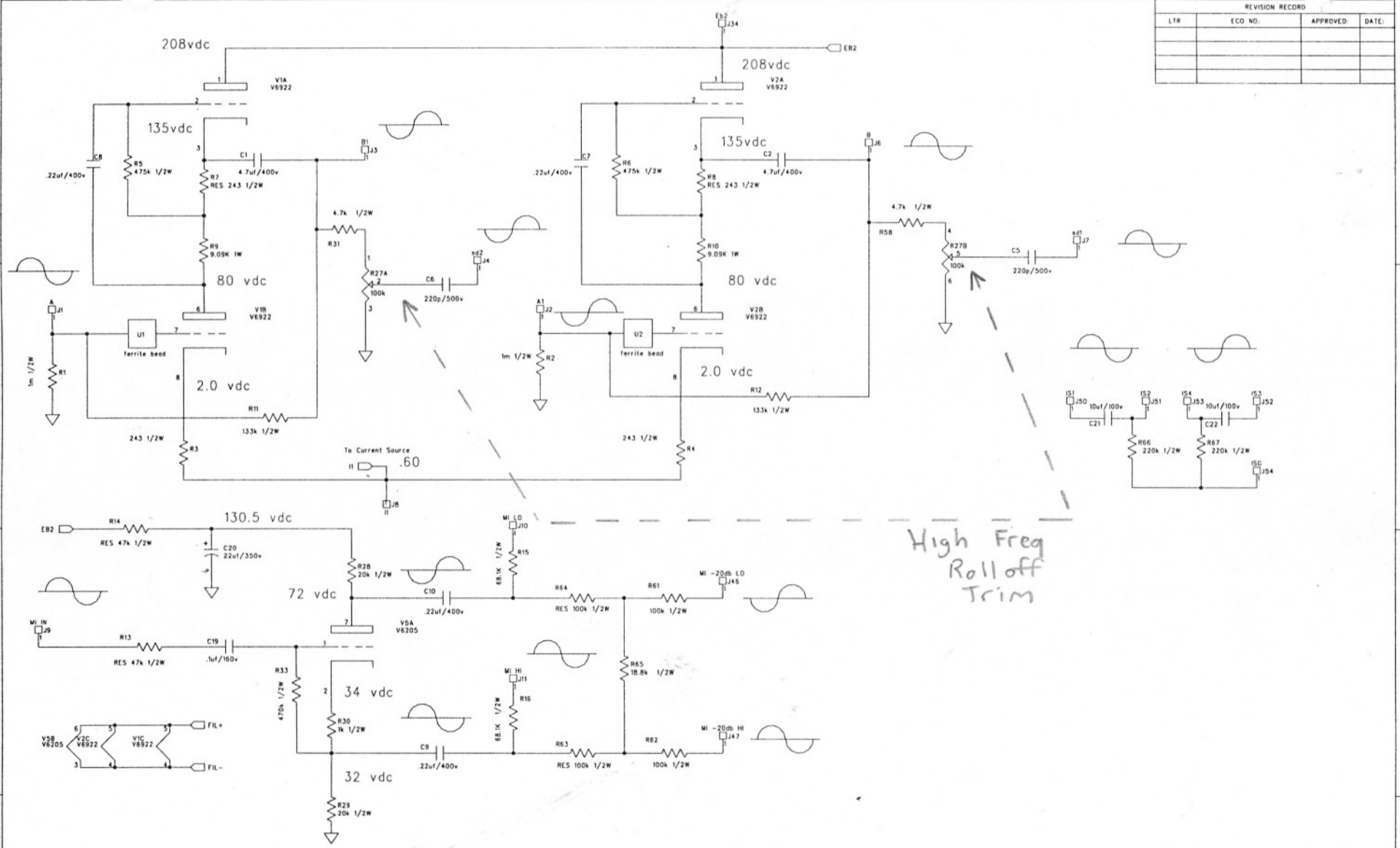

All phase notations are referenced to Input connector signal phase

XLR IN

Pin 1 = GND
Pin 2 = Signal High = Plus Phase =
Pin 3 = Signal Low = Minus Phase =

TRS 1/4" IN

TIP = Signal High = Plus Phase =
RING = Signal Low = Minus Phase =
SLEEVE = GND

1/4" Unbalanced IN

TIP = Signal High = Plus Phase =
SLEEVE = GND

DRAWN: D.Sierer	DATED: 11SEP00	COMPANY: GT ELECTRONICS	
RELEASED:	DATED:	TITLE: Input Amp	
		PART NUMBER:	REV:
		ASSY NUMBER:	
		FILENAME: ipamp2z	SIZE: C
		SCALE:	SHEET: 1 OF 3