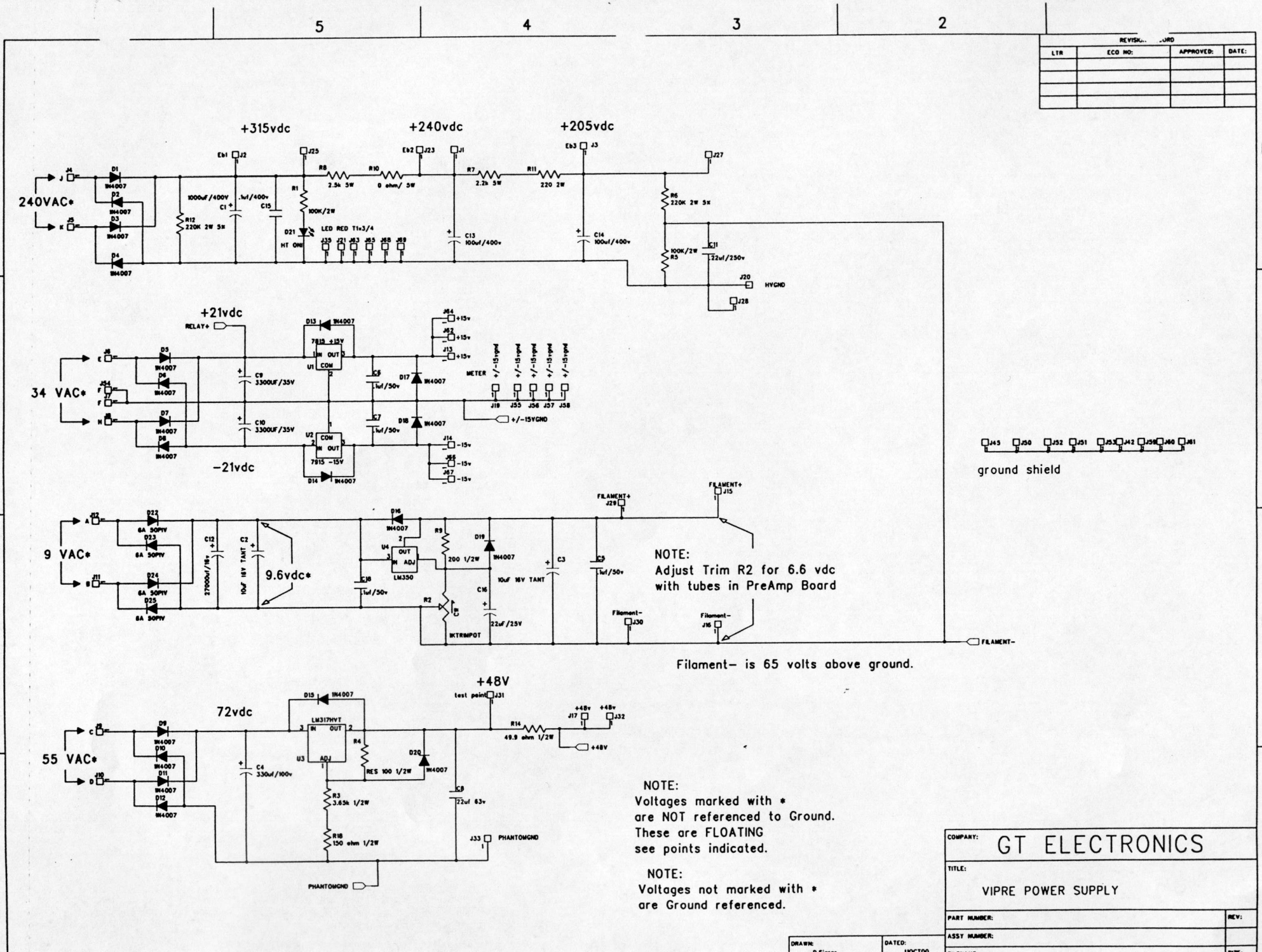
5
4
3
2
REVISIONS RECORD
LTR
ECO NO:
APPROVED:
DATE:
+315vdc
+240vdc
+205vdc
240VAC*
J4
J5
D1 1N4007
D2 1N4007
D3 1N4007
D4 1N4007
R12 220K 2W 5%
1000uf/400V C1
.1uf/400v C15
Eb1 J2
J25
R1 100K/2W
D21 LED RED T1=3/4
HT ON
J35 J21 J63 J65 J68 J69
R8 2.5k 5W
R10 0 ohm/ 5W
Eb2 J23
J1
R7 2.2k 5W
R11 220 2W
Eb3 J3
J27
R6 220K 2W 5%
R5 100K/2W
C11 .22uf/250v
J20 HVGND
J28
C13 100uf/400v
C14 100uf/400v
+21vdc
RELAY+
34 VAC*
J6
J54
J8
D5 1N4007
D6 1N4007
D7 1N4007
D8 1N4007
C9 3300UF/35V
C10 3300UF/35V
-21vdc
D13 1N4007
7815 +15V
U1 COM
D14 1N4007
U2 COM
7915 -15V
C5 .1uf/50v
C7 .1uf/50v
D17 1N4007
D18 1N4007
J64 +15v
J62 +15v
J13 +15v
METER
+/-15vgnd
J19 J55 J56 J57 J58
+/-15VGND
J14 -15v
J66 -15v
J67 -15v
J45 J50 J52 J51 J53 J42 J59 J60 J61
ground shield
9 VAC*
J12
J11
D22 6A 50PIV
D23 6A 50PIV
D24 6A 50PIV
D25 6A 50PIV
C12 27000uf/16v
C2 10uF 16V TANT
9.6vdc*
D16 1N4007
U4 OUT ADJ
LM350
C18 .1uf/50v
R9 200 1/2W
D19 1N4007
C16 10uF 16V TANT
22uF/25V
R2 10
INTRIMPOT
C3
C5 .1uf/50v
FILAMENT+
J29
J15
Filament-
J30
J16
FILAMENT-
NOTE:
Adjust Trim R2 for 6.6 vdc
with tubes in PreAmp Board
Filament- is 65 volts above ground.
55 VAC*
J9
J10
D9 1N4007
D10 1N4007
D11 1N4007
D12 1N4007
72vdc
C4 330uf/100v
D15 1N4007
LM317HVT
IN OUT
U3 ADJ
R4 RES 100 1/2W
R3 3.65k 1/2W
R18 150 ohm 1/2W
D20 1N4007
+48V
test point
J31
R14 49.9 ohm 1/2W
J17 +48v
J32 +48v
+48V
C8 22uf 63v
J33 PHANTOMGND
PHANTOMGND
NOTE:
Voltages marked with *
are NOT referenced to Ground.
These are FLOATING
see points indicated.
NOTE:
Voltages not marked with *
are Ground referenced.
COMPANY:
GT ELECTRONICS
TITLE:
VIPRE POWER SUPPLY
PART NUMBER:
REV:
ASSY NUMBER:
DRAWN:
D Sieger
DATED:
10OCT00
D
C
B
A